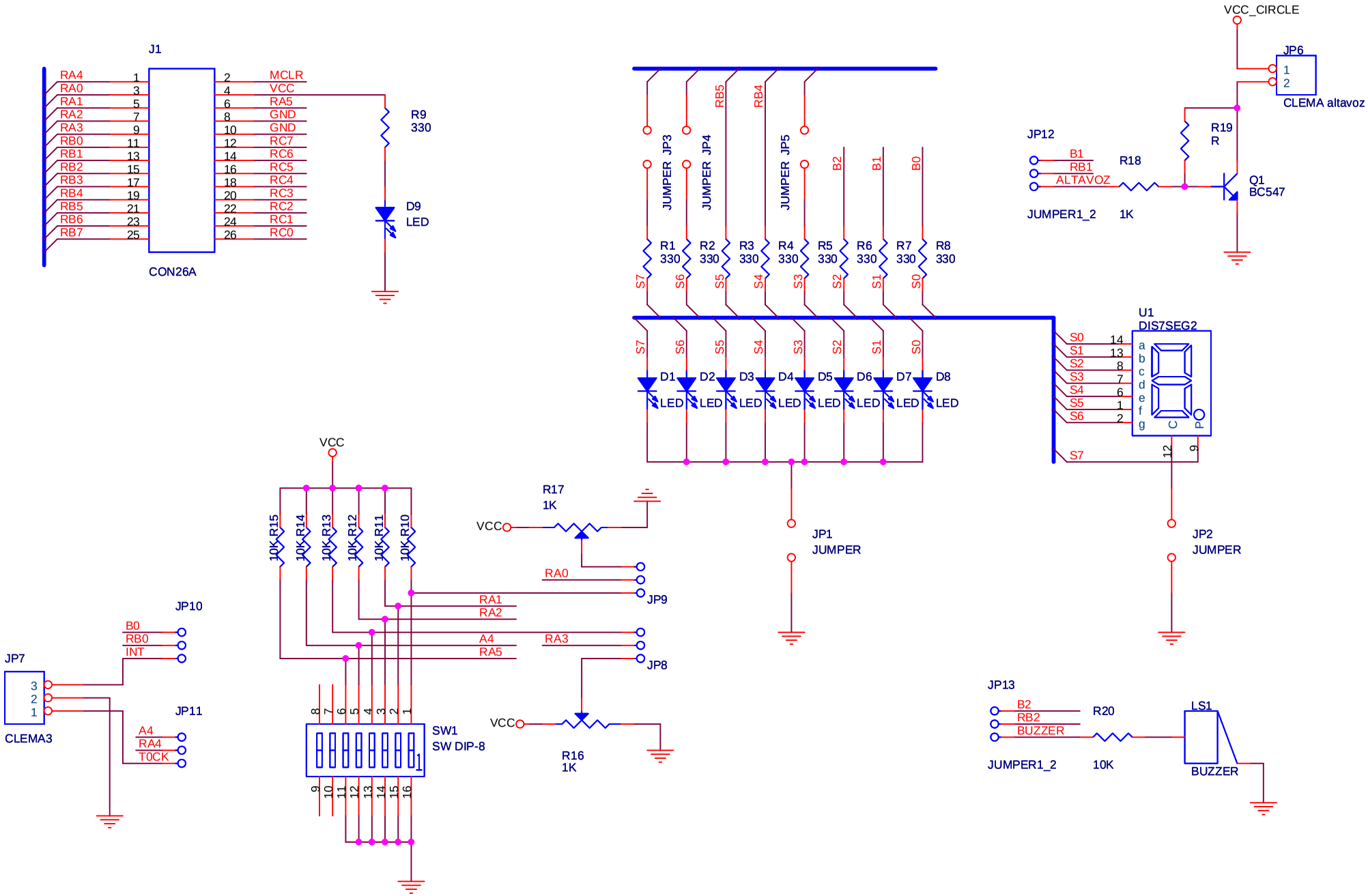

Title	PERIFERICO PLACA MONIBOT	
Size A4	Document Number IES JUAN DE LA CIERVA. MADRID	Rev <RevC
Date: Friday, March 21, 2008	Sheet 1 of 1	

ALTAVOZ
BUZZER
R9
330
LED
D1
BC547
R17
1K
R16
1K
R19
4K7
ANL0 JP9
DIG0
ANL3 JP8
DIG1
JP11
TOCK
A4
RA4
Q2
BC558
R20
10K
IES JUAN DE LA CIERVA
PERIFERICOS MONIBOT
D.P.E. 2008
BUZZER
JP13
B2
ALTAVOZ
JP12
B1
INT
JP10
B0
TOCK
GND
INT
DIS_ON
J1
10K
10K
10K
10K
10K
DEBUGGER
JP4
JP3
JP5
330
330
330
330
330
330
330
LED_ON
RA5
RA4
RA3
RA2
RA1
RA0
RB7
RB6
RB5
RB4
RB3
RB2
RB1
RB0
DISPLAY